Track index	1	
Track type	I	-
Maximum permissible flux density	-	mT
Minimum permissible flux density	-	mT
Mechanical working distance	-	mm
Magnetic working distance	-	mm
Magnetization type	ROnl	-
Magnetization direction (parallel/normal)	normal	-
Pole number	24	-
Track width	6.5	mm
Maximum permissible pole location deviation	-	°
Maximum permissible pole length deviation	-	°

Track 1			
Pole (j)	Pole length	Pole location	Pole direction
	°	°	
1	15	0	N
2	15	15	S
3	15	30	N
...	...	...	...
23	15	330	N
24	15	345	S

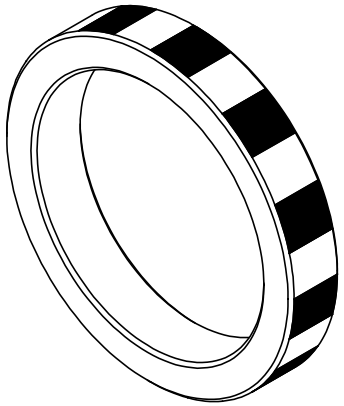

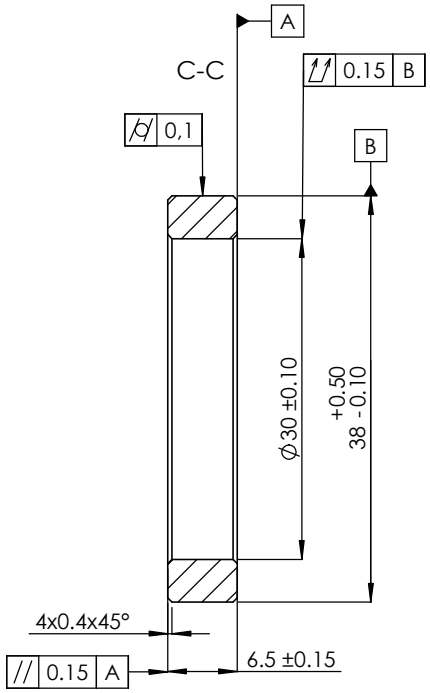

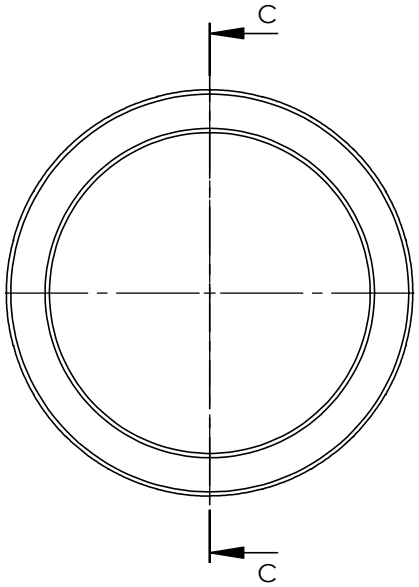

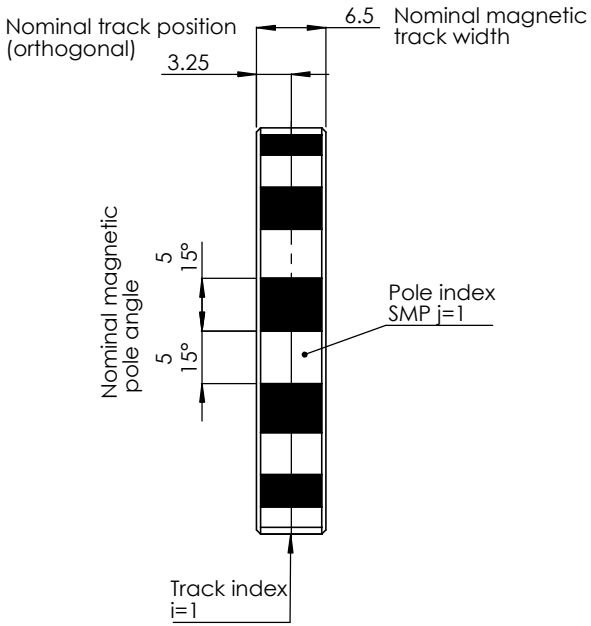

Magnetization direction

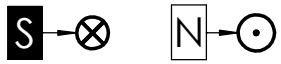

Attention

- Component is magnetized
- Exposure to external magnetic fields might influence or destroy magnetic encodings of the magnetic scale
- Protect the surface from mechanical damage
- Resistance to chemical substances is to be checked prior to exposure

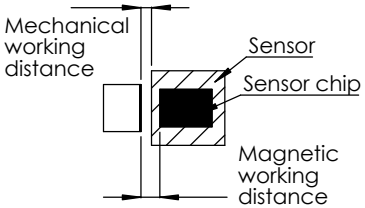

Rev.	Name	Date	Change description

General surface quality: Ra <3.2

General workpiece edges: -0.5

General tolerances: ISO 2768-mH

Units: mm

Comment:

Material / Pre product: DIN IEC 60404-8-1 HF8/22p

SENSITEC MAGNETORESISTIVE SENSORS

www.sensitec.com

© 2021 Sensitec GmbH. All rights reserved

Confidential information of Sensitec GmbH

Drawn by	Date	Approved by	Date
Quirnheim D.	25.03.2025	Bautz P.	22.04.2025

Title: MWI0024HAE-UA

Part number: 5108.6121.0

Scale	Rev.	Doc. Type	Sheet
2:1	00	ZE1	1/1